Distributore rotante 06 vie
Swivel joint 06 ways

Item code
D075060100

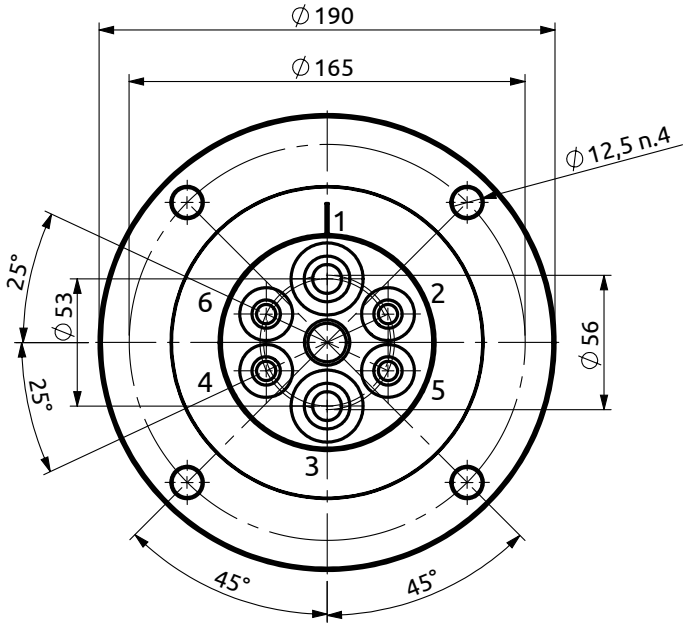

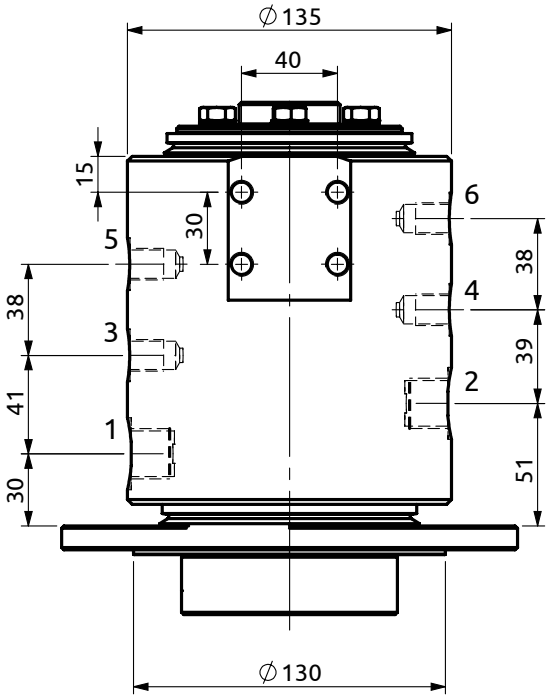

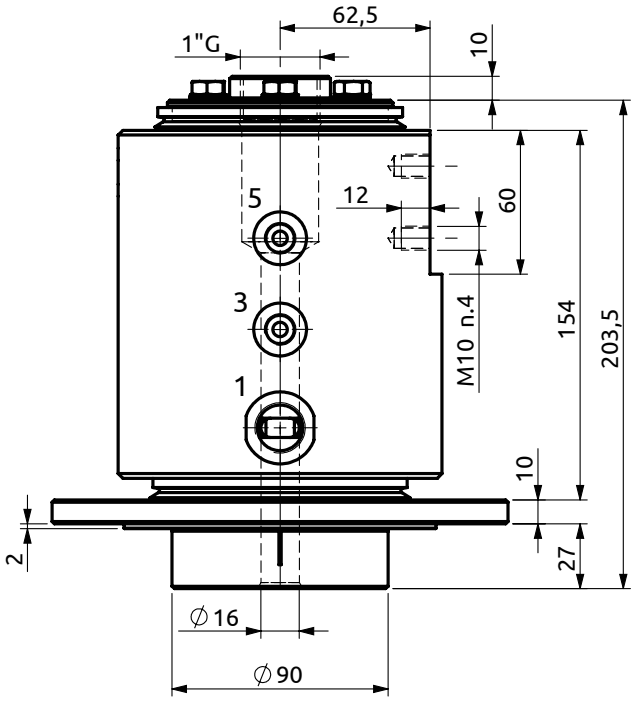

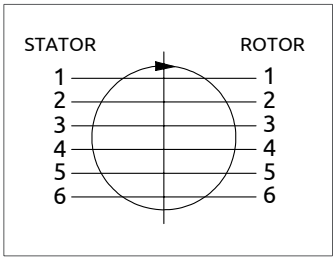

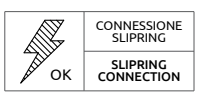

POS.	Statore **Stator**	Rotore **Rotor**	DN (mm)	Pressione max a 12RPM (bar) **Max pressure at 12RPM (bar)**	Fluido **Fluid**
1	1/2"G	1/2"G	12	350	Hydraulic Oil
2	1/2"G	1/2"G	12	350	Hydraulic Oil
3	1/4"G	1/4"G	6	350	Hydraulic Oil
4	1/4"G	1/4"G	6	350	Hydraulic Oil
5	1/4"G	1/4"G	6	350	Hydraulic Oil
6	1/4"G	1/4"G	6	350	Hydraulic Oil