Distributore rotante 05 vie
Swivel joint 05 ways

Item code
D100050500

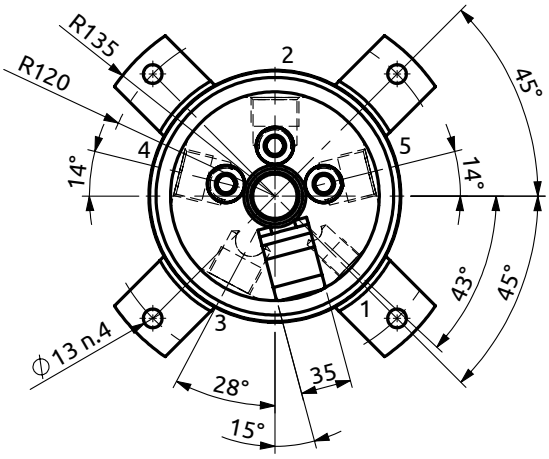

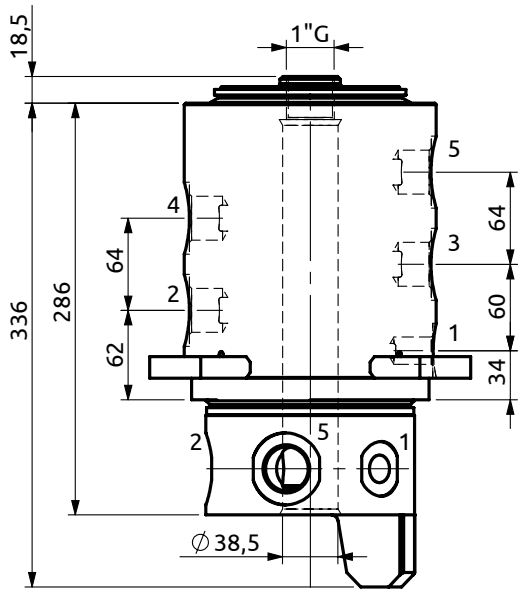

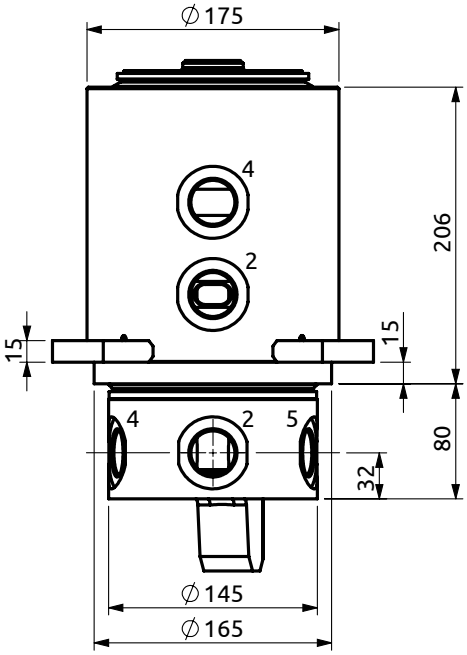

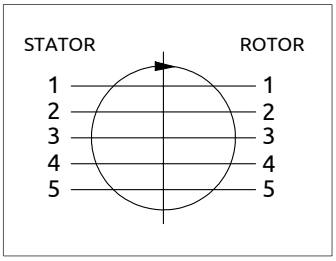

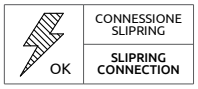

POS.	Statore **Stator**	Rotore **Rotor**	DN (mm)	Pressione max a 12RPM (bar) **Max pressure at 12RPM (bar)**	Fluido **Fluid**
1	1/2"G	1/2"G	14	400	Hydraulic Oil
2	1"G	1"G	22	400	Hydraulic Oil
3	1"G	1"G	22	400	Hydraulic Oil
4	1"G	1"G	22	400	Hydraulic Oil
5	1"G	1"G	22	400	Hydraulic Oil