Distributore rotante 02 vie
Swivel joint 02 ways

Item code
D085020800

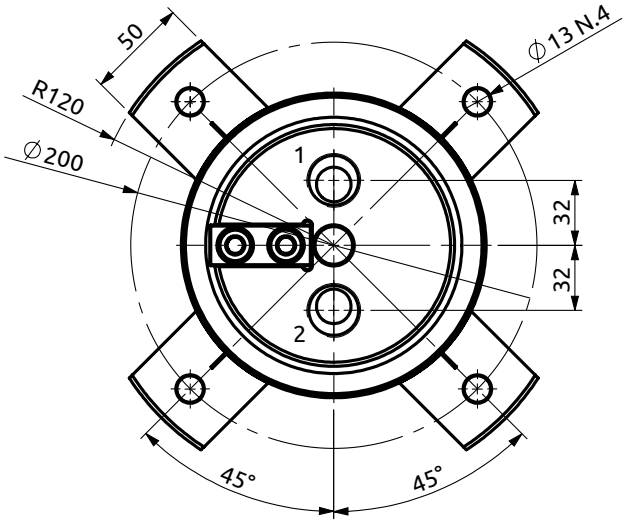

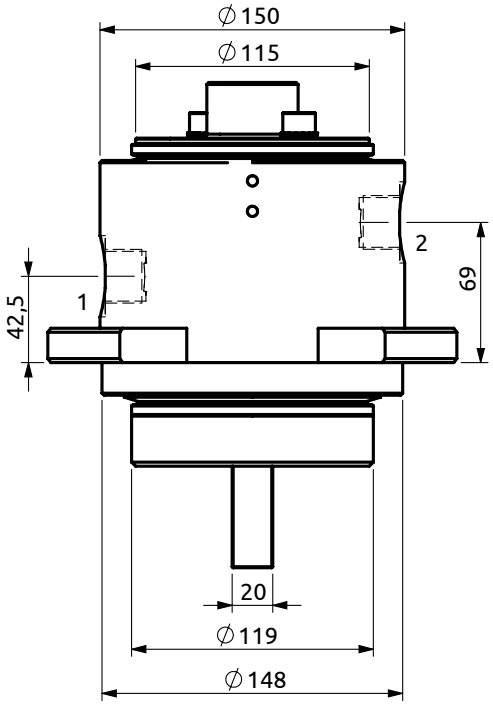

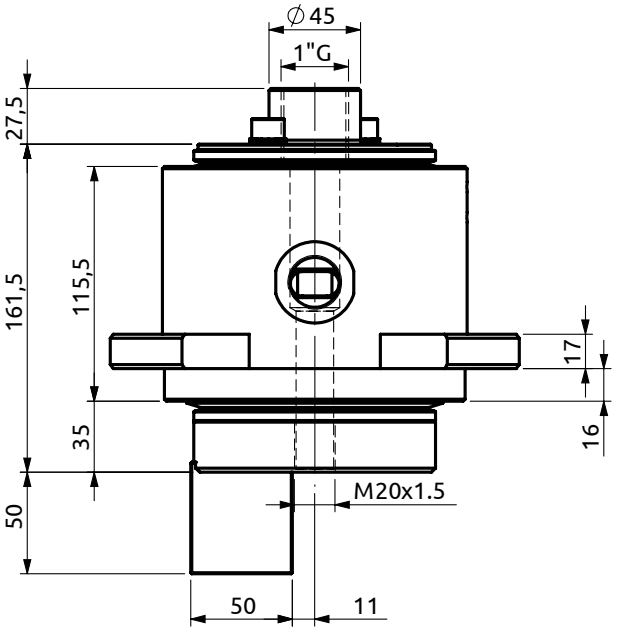

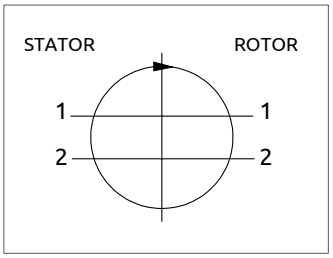

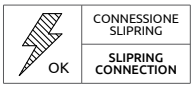

POS.	Statore **Stator**	Rotore **Rotor**	**DN (mm)**	Pressione max a 12RPM (bar) **Max pressure at 12RPM (bar)**	Fluido **Fluid**
1	3/4"G	3/4"G	17	420	Hydraulic Oil
2	3/4"G	3/4"G	17	420	Hydraulic Oil