DISTRIBUTORE ROTANTE 10 VIE
SWIVEL JOINT 10 WAYS

codice distributore

D170100200

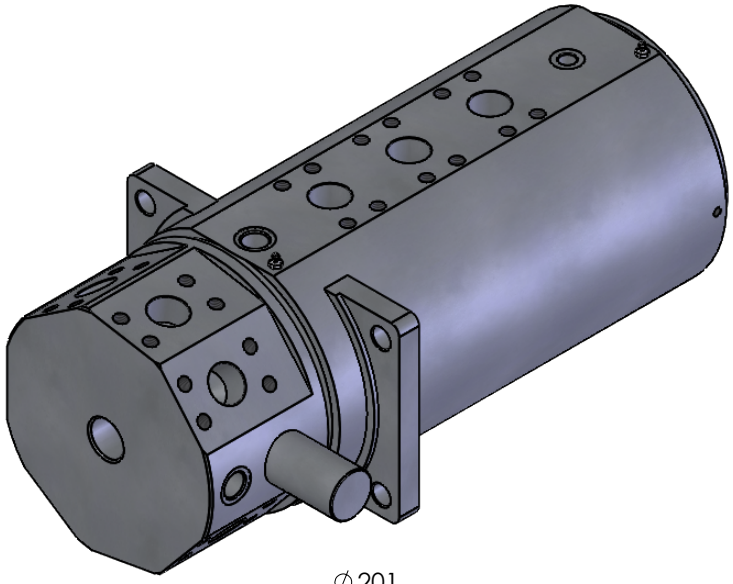

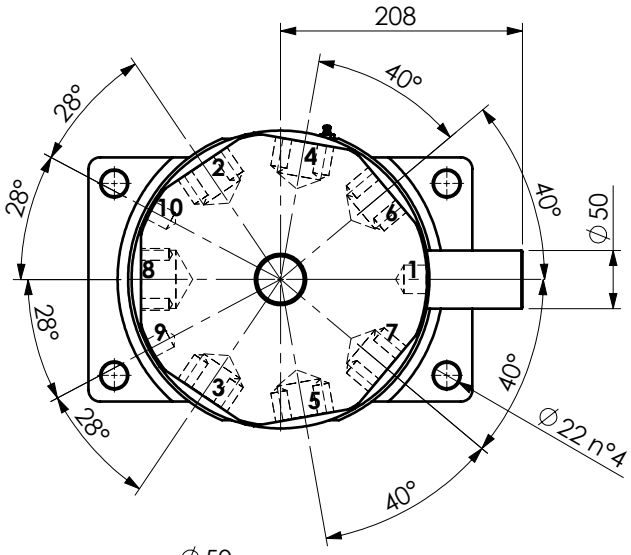

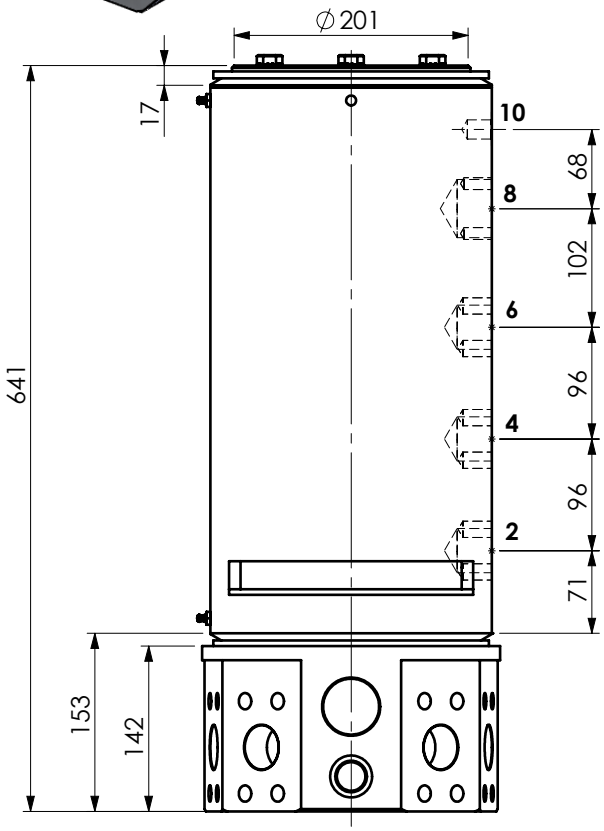

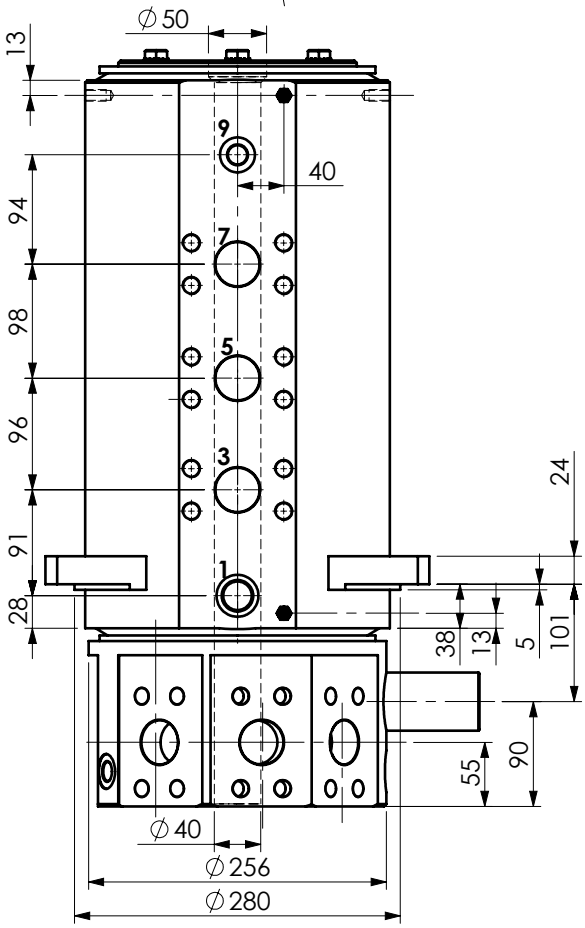

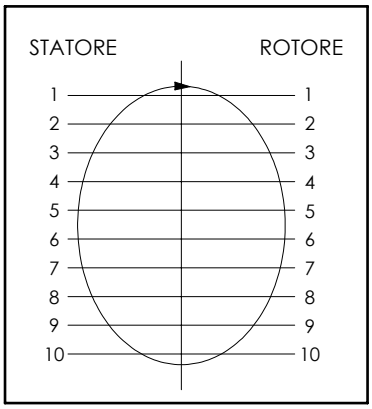

POS.	STATORE stator	ROTORE rotor	DN [mm]	PRESSIONE MAX A 12RPM[bar] max pressure at 12RPM[bar]	FLUIDO fluid
1	3/4"G	3/4"G	20	450	Hydraulic Oil
2	1"1/2 SAE 6000	1"1/2 SAE 6000	30	450	Hydraulic Oil
3	1"1/2 SAE 6000	1"1/2 SAE 6000	30	450	Hydraulic Oil
4	1"1/2 SAE 6000	1"1/2 SAE 6000	30	450	Hydraulic Oil
5	1"1/2 SAE 6000	1"1/2 SAE 6000	30	450	Hydraulic Oil
6	1"1/2 SAE 6000	1"1/2 SAE 6000	30	450	Hydraulic Oil
7	1"1/2 SAE 6000	1"1/2 SAE 6000	30	450	Hydraulic Oil
8	2" SAE 3000	2" SAE 3000	40	450	Hydraulic Oil
9	M18x1.5	M18x1.5	10	450	Hydraulic Oil
10	M18x1.5	M18x1.5	10	450	Hydraulic Oil